Work Order ID 56504

Thursday, February 25, 2010 11:39:02 AM

Item ID: D407-667-205 **Accept** **Setup Start**

Revision ID: **Stop**

Item Name: Crosstube Aft

Start Date: 2/26/2010 **Start Qty:** 1.00 **Cust Item ID:**

Required Date: 3/12/2010 **Req'd Qty:** 1.00 **Customer:**

Reference:

Approvals: **Process Plan:** MF # **Date:** 10-2-25 **Tooling:** **Date:** **Run Start**

QC: **Date:** **SPC (Y/N):** **Date:** **Stop**

Sequence ID/ Work Center ID	Operation Description	Set Up/ Run Hours	Draw Number	Draw Rev.	Plan Code	Accept Qty	Reject Qty	Reject Number	Insp. Stamp
Draw Nbr	**Revision Nbr**								
D407-667-245	Rev F								

Pto ⇒

100 — DOCUMENT CONTROL — 0.00

DC — **Memo** — 0.00

Document Control

Photocopy bluefile and create labels as per PPP D407-667-205 CHG006

S [illegible] for BG 10/04/01

110 — Packaging — 0.00

Packaging — **Memo** — 0.00

Packaging

10-3-18

120 — BENDING MACHINE - CROSSTUBES — 0.00

CNC Bend 1 — **Memo** — 0.00

CNC Delta 100 Bender

1-Bend tube as per Dwg D407-667-245 using CNC bender program 407 Aft and Folio FT

10-3-18

Dart Aerospace Ltd

W/O: 56504		WORK ORDER CHANGES					
DATE	STEP	PROCEDURE CHANGE Perm. change	By	Date	Qty	Approval Chief Eng / Prod Mgr	Approval QC Inspector
10/04/05	# 100	Go through and Fix Routing numbers Attach copy of Bom as Ref.		10.04.07			10/04/05

Part No: D407-667-205 PAR #: _____ Fault Category: _____ NCR: Yes No DQA: _____ Date: _____

Resolution: _____ Disposition: _____ QA: N/C Closed: _____ Date: _____

NCR:		WORK ORDER NON-CONFORMANCE (NCR)						
DATE	STEP	Description of NC Section A	Corrective Action Section B			Verification Section C	Approval Chief Eng	Approval QC Inspector
			Initial Chief Eng	Action Description Chief Eng	Sign & Date			

NOTE: Date & initial all entries

H:\FORMS\Quality Assurance\approved QA\NCRWO RevE

Work Order ID 56504

Thursday, February 25, 2010 11:39:02 AM

Item ID: D407-667-205 **Accept** **Setup Start** **Stop**

Revision ID:

Item Name: Crosstube Aft

Start Date: 2/26/2010 **Start Qty:** 1.00 **Cust Item ID:**

Required Date: 3/12/2010 **Req'd Qty:** 1.00 **Customer:**

Reference:

Approvals: **Process Plan:** _____ **Date:** _____ **Tooling:** _____ **Date:** _____ **Run Start** **Stop**

QC: _____ **Date:** _____ **SPC (Y/N):** _____ **Date:** _____

Sequence ID/ Work Center ID	Operation Description	Set Up/ Run Hours	Draw Number	Draw Rev.	Plan Code	Accept Qty	Reject Qty	Reject Number	Insp. Stamp
130	QC15- Crosstube Dimensional Check	0.00							
QC Quality Control	**Memo**	0.00	9P 10.03.18 / 8 10/03/18 (K)						

B56504 D407-667-205

Dart Aerospace Ltd

W/O:		WORK ORDER CHANGES					
DATE	STEP	PROCEDURE CHANGE	By	Date	Qty	Approval Chief Eng / Prod Mgr	Approval QC Inspector

Part No: _____ PAR #: _____ Fault Category: _____ NCR: Yes No DQA: _____ Date: _____

Resolution: _____ Disposition: _____ QA: N/C Closed: _____ Date: _____

NCR:		WORK ORDER NON-CONFORMANCE (NCR)						
DATE	STEP	Description of NC Section A	Corrective Action Section B			Verification Section C	Approval Chief Eng	Approval QC Inspector
			Initial Chief Eng	Action Description Chief Eng	Sign & Date			

NOTE: Date & initial all entries

H:\FORMS\Quality Assurance\approved QA\NCRWO RevE

Work Order ID 56504

Thursday, February 25, 2010 11:39:02 AM

Item ID: D407-667-205 **Accept** **Setup Start**

Revision ID: **Stop**

Item Name: Crosstube Aft

Start Date: 2/26/2010 **Start Qty:** 1.00 **Cust Item ID:**

Required Date: 3/12/2010 **Req'd Qty:** 1.00 **Customer:**

Reference:

Approvals: **Process Plan:** _____ **Date:** _____ **Tooling:** _____ **Date:** _____ **Run Start**

QC: _____ **Date:** _____ **SPC (Y/N):** _____ **Date:** _____ **Stop**

Sequence ID/ Work Center ID	Operation Description	Set Up/ Run Hours	Draw Number	Draw Rev.	Plan Code	Accept Qty	Reject Qty	Reject Number	Insp. Stamp
140		0.00							
Crosstubes	Crosstubes								
Crosstubes	**Memo**	0.00							

Memo

1-Drill pilot holes in tube using drill Jig DT8583 & DT8584 as per Dwg D407-667-245. Drill all (3) top holes.

2-Drill and Ream all holes in tube to finish size using drill Jig DT8583 & DT8584 as per Dwg D407-667-245Check dimensions between holes on all four sides.

3-Flip tube and switch drilling Jigs from right to left, left to right. Locate Jigs off existing holes using "T" pins.

4-Drill pilot holes using drill Jig DT8583 & DT8584 as per Dwg D407-667-245. Drill only the top (2) holes.

5-Drill & ream the top (2) holes to finish size using drill Jig DT8583 & DT8584 as per Dwg D407-667-245

6-Drill Aft rivet holes using drill Jig DT8789 as per Dwg D407-667-245. Note: Aft side has 3x top holes.

7-Drill Fwd rivet holes using drill Jig DT8789 as per Dwg D407-667-245. Drill only the top (3) holes.

8-C'sink holes as per Dwg D407-667-245. Allow rivet to sit below surface to compensate for paint.

9- Scribe tube to identify on the inner chamfer in the cuff D# and B#

10-Deburr & Inspect for surface damage. Repair damage within limits as per

MB 10-03-23

AWM 10-3-23

Dart Aerospace Ltd

W/O:		WORK ORDER CHANGES					
DATE	STEP	PROCEDURE CHANGE	By	Date	Qty	Approval Chief Eng / Prod Mgr	Approval QC Inspector

Part No: _____ PAR #: _____ Fault Category: _____ NCR: Yes No DQA: _____ Date: _____

Resolution: _____ Disposition: _____ QA: N/C Closed: _____ Date: _____

NCR:		WORK ORDER NON-CONFORMANCE (NCR)						
DATE	STEP	Description of NC Section A	Corrective Action Section B			Verification Section C	Approval Chief Eng	Approval QC Inspector
			Initial Chief Eng	Action Description Chief Eng	Sign & Date			

NOTE: Date & initial all entries

H:\FORMS\Quality Assurance\approved QA\NCRWO RevE

Work Order ID 56504

Thursday, February 25, 2010 11:39:02 AM

Item ID: D407-667-205 **Accept** **Setup Start**

Revision ID:

Item Name: Crosstube Aft **Stop**

Start Date: 2/26/2010 **Start Qty:** 1.00 **Cust Item ID:**

Required Date: 3/12/2010 **Req'd Qty:** 1.00 **Customer:**

Reference:

Approvals: **Process Plan:** _____ **Date:** _____ **Tooling:** _____ **Date:** _____ **Run Start**

QC: _____ **Date:** _____ **SPC (Y/N):** _____ **Date:** _____ **Stop**

Sequence ID/ Work Center ID	Operation Description	Set Up/ Run Hours	Draw Number	Draw Rev.	Plan Code	Accept Qty	Reject Qty	Reject Number	Insp. Stamp
	Dwg D407-667-245								
150	Crosstubes Chemical Conversion	0.00				1	-	-	AWM 10-3-24
HandFXtube	**Memo**	0.00							
Hand Finishing Crosstubes									
160	QC3- Inspect Part Finish	0.00							
QC	**Memo**	0.00							
Quality Control									
170	QC5- Inspect part completeness to step on W/O	0.00				(+0)	0		
QC	**Memo**	0.00							
Quality Control									

Work Order ID 56504

Thursday, February 25, 2010 11:39:02 AM

Item ID: D407-667-205 **Accept** **Setup Start**

Revision ID: **Stop**

Item Name: Crosstube Aft

Start Date: 2/26/2010 **Start Qty:** 1.00 **Cust Item ID:**

Required Date: 3/12/2010 **Req'd Qty:** 1.00 **Customer:**

Reference:

Approvals: **Process Plan:** _____ **Date:** _____ **Tooling:** _____ **Date:** _____ **Run Start**

QC: _____ **Date:** _____ **SPC (Y/N):** _____ **Date:** _____ **Stop**

Sequence ID/ Work Center ID	Operation Description	Set Up/ Run Hours	Draw Number	Draw Rev.	Plan Code	Accept Qty	Reject Qty	Reject Number	Insp. Stamp
180	Outsource process - NDT per QSI038 4.1	0.00							
Outsource2	**Memo**	0.00				CY	10/3/24		1
Outsource process - NDT	Liquid Penetrant Inspection as per QSI 038O Issue P/O: 11550 LPI as per ASTM 1417 Level 2 Attach copy of NDT results to work order								
190		0.00							
Packaging	Packaging								
Packaging	**Memo**	0.00					10/3/24		1
Packaging	Ensure copy of NDT results attached to work order.								
200	QC5- Inspect part completeness to step on W/O	0.00							
QC	**Memo**	0.00				10	03	29	1
Quality Control									

Work Order ID 56504

Thursday, February 25, 2010 11:39:02 AM

Item ID: D407-667-205 **Accept** **Setup Start**

Revision ID:

Item Name: Crosstube Aft **Stop**

Start Date: 2/26/2010 **Start Qty:** 1.00 **Cust Item ID:**

Required Date: 3/12/2010 **Req'd Qty:** 1.00 **Customer:**

Reference:

Approvals: **Process Plan:** _____ **Date:** _____ **Tooling:** _____ **Date:** _____ **Run Start**

QC: _____ **Date:** _____ **SPC (Y/N):** _____ **Date:** _____ **Stop**

Sequence ID/ Work Center ID	Operation Description	Set Up/ Run Hours	Draw Number	Draw Rev.	Plan Code	Accept Qty	Reject Qty	Reject Number	Insp. Stamp
210		0.00							
SprayPaint	SprayPaint					M	10	03	29 (1)
	Memo	0.00							
Spray Painting	1-Prime inside and outside crosstube as per QSI 005 4.2 2-Paint outside crosstube with White Imron as per QSI 005 4.2 PRIME: Start Time: 9:00 Fininsh Time: 10:00 PAINT: Start Time: 2:00 Finish Time: 3:00								
220	QC14- Inspect Spray Paint	0.00							
QC	**Memo**	0.00				1			10CB 30
Quality Control	Then,Wrap in plastic bag to protect from scratches								

Work Order ID 56504

Thursday, February 25, 2010 11:39:02 AM

Item ID: D407-667-205 **Accept** **Setup Start** **Stop**

Revision ID:

Item Name: Crosstube Aft

Start Date: 2/26/2010 **Start Qty:** 1.00 **Cust Item ID:**

Required Date: 3/12/2010 **Req'd Qty:** 1.00 **Customer:**

Reference:

Run Start **Stop**

Approvals: **Process Plan:** _____ **Date:** _____ **Tooling:** _____ **Date:** _____

QC: _____ **Date:** _____ **SPC (Y/N):** _____ **Date:** _____

Sequence ID/ Work Center ID	Operation Description	Set Up/ Run Hours	Draw Number	Draw Rev.	Plan Code	Accept Qty	Reject Qty	Reject Number	Insp. Stamp
230		0.00							
Crosstubes	Crosstubes					ML	10	03	30 (1)
Crosstubes	**Memo**	0.00							

1-Install abrasion strips as per QSI 035 using DT8674. Install chafing shield as per Dwg D407-667-245.Note: (3) top holes should be facing up. → ML 10·03·31

2- Lightly scuff the bonded area using a 320 grit sand paper and clean the area with 41058 wash 'n' wipe

3-Install support with magnobond and install clamps as per Dwg D407-667-245 using installaition jig DT9025. Torque clamps to 80-100 in lb → ML 10·03·31

A/R Magnobond Batch: 112417
EXP: 01/2011

4-Install nut plates as per Dwg D407-667-245. Touch-up rivet heads with Imron paint. → ML 10·03·31

240	QC5- Inspect part completeness to step on W/O	0.00							
QC	**Memo**	0.00							
Quality Control									

Work Order ID 56504

Thursday, February 25, 2010 11:39:02 AM

Item ID: D407-667-205 **Accept** **Setup Start** **Stop**

Revision ID:

Item Name: Crosstube Aft

Start Date: 2/26/2010 **Start Qty:** 1.00 **Cust Item ID:**

Required Date: 3/12/2010 **Req'd Qty:** 1.00 **Customer:**

Reference:

Approvals: **Process Plan:** _____ **Date:** _____ **Tooling:** _____ **Date:** _____ **Run Start** **Stop**

QC: _____ **Date:** _____ **SPC (Y/N):** _____ **Date:** _____

Sequence ID/ Work Center ID	Operation Description	Set Up/ Run Hours	Draw Number	Draw Rev.	Plan Code	Accept Qty	Reject Qty	Reject Number	Insp. Stamp
250	Pick Kit	0.00							
Packaging	**Memo**	0.00				10-4-15			
Packaging									
260	QC4- 100% Inspect kits for completeness	0.00	8.0104106						
QC	**Memo**	0.00				(R)			
Quality Control									
270	Packaging	0.00							
Packaging	**Memo**	0.00				Pa 14/16			
Packaging	Identify and in kanban rack Location:_____								

NUR

Work Order ID 56504

Thursday, February 25, 2010 11:39:02 AM

Item ID: D407-667-205 **Accept** **Setup** **Start**

Revision ID: **Stop**

Item Name: Crosstube Aft

Start Date: 2/26/2010 **Start Qty:** 1.00 **Cust Item ID:**

Required Date: 3/12/2010 **Req'd Qty:** 1.00 **Customer:**

Reference:

Run **Start**

Approvals: **Process Plan:** _____ **Date:** _____ **Tooling:** _____ **Date:** _____ **Stop**

QC: _____ **Date:** _____ **SPC (Y/N):** _____ **Date:** _____

Sequence ID/ Work Center ID	Operation Description	Set Up/ Run Hours	Draw Number	Draw Rev.	Plan Code	Accept Qty	Reject Qty	Reject Number	Insp. Stamp
280	QC21- Final Inspection - Work Order Release	0.00							10/04/07
QC Quality Control	**Memo**	0.00							MF 10-4-7

Picklist Print

Thursday, February 25, 2010 11:39:01 AM

7

Work Order ID: 56504

Parent Item: D407-667-205

Parent Item Name: Crosstube Aft

Start Date: 2/26/2010 **Required Date:** 3/12/2010

Start Qty: 1.00 **Required Qty:** 1.00

Comments: IPP Rev:C□05.09.02□Add holes for compatibility with Bell Skidtubes□KJ/JLM
IPP Rev:D Added Magnobond,Rubber Cushion & Clamps 07-02-19
JLM

NAS1149D0563J $51 017 SD

M113706

AN960JD516	Purchased	No	100	Each	0.0000	18.0000	
Washer							
D2856-400	Manufactured	No	230	f	256.5521	1.3558	
Abraison Strip							

10-4-1 SD

Warehouse Location	Loc Qty	Loc Code
Main Warehouse		
ST403	256.5520842	
50593	141.312084	
52563	115.24	

MI 10·03·31

D2873-043	Manufactured	No	230	Each	37.0000	2.0000	
Nut Plate Assembly							

Warehouse Location	Loc Qty	Loc Code
Main Warehouse		
ST	37	
45370	2	
45422	1	
50871	14	
53966	20	

MI 10·03·31

Dart Aerospace Ltd

W/O:		WORK ORDER CHANGES					
DATE	STEP	PROCEDURE CHANGE	By	Date	Qty	Approval Chief Eng / Prod Mgr	Approval QC Inspector

Part No: _____ **PAR #:** _____ **Fault Category:** _____ **NCR:** Yes No **DQA:** _____ **Date:** _____

Resolution: _____ **Disposition:** _____ **QA: N/C Closed:** _____ **Date:** _____

NCR:		WORK ORDER NON-CONFORMANCE (NCR)						
DATE	STEP	Description of NC Section A	Corrective Action Section B			Verification Section C	Approval Chief Eng	Approval QC Inspector
			Initial Chief Eng	Action Description Chief Eng	Sign & Date			

NOTE: Date & initial all entries

Picklist Print

Thursday, February 25, 2010 11:39:01 AM

Work Order ID: 56504

Parent Item: D407-667-205

Parent Item Name: Crosstube Aft

Comments: IPP Rev:C□05.09.02□Add holes for compatibility with Bell Skidtubes□KJ/JLM
IPP Rev:D Added Magnobond,Rubber Cushion & Clamps 07-02-19
JLM

Start Date: 2/26/2010 **Required Date:** 3/12/2010
Start Qty: 1.00 **Required Qty:** 1.00

D2873-045	Manufactured	No	230	Each	55.0000	2.0000	
Nut Plate Assembly							

Warehouse Location	Loc Qty	Loc Code
Main Warehouse		
ST	55	
45210	3	
50001	12	
53967	20	
53968	20	

ml 10·03·31

D2894-1	Manufactured	No	230	Each	27.0000	1.0000	
2.750 Support							

Warehouse Location	Loc Qty	Loc Code
Main Warehouse		
ST	27	
43713	8	
43881	18	
45483	1	

ml 10·03·30

Dart Aerospace Ltd

W/O:		WORK ORDER CHANGES					
DATE	STEP	PROCEDURE CHANGE	By	Date	Qty	Approval Chief Eng / Prod Mgr	Approval QC Inspector

Part No: _____ PAR #: _____ Fault Category: _____ NCR: Yes No DQA: _____ Date: _____

Resolution: _____ Disposition: _____ QA: N/C Closed: _____ Date: _____

NCR:		WORK ORDER NON-CONFORMANCE (NCR)						
DATE	STEP	Description of NC Section A	Corrective Action Section B			Verification Section C	Approval Chief Eng	Approval QC Inspector
			Initial Chief Eng	Action Description Chief Eng	Sign & Date			

NOTE: Date & initial all entries

H:\fFORMS\Quality Assurance\approved QA\NCRWO RevE

Picklist Print

Thursday, February 25, 2010 11:39:01 AM

Work Order ID: 56504

Parent Item: D407-667-205

Parent Item Name: Crosstube Aft

Comments: IPP Rev:C□05.09.02□Add holes for compatibility with Bell Skidtubes□KJ/JLM
IPP Rev:D Added Magnobond,Rubber Cushion & Clamps 07-02-19
JLM

Start Date: 2/26/2010 **Required Date:** 3/12/2010
Start Qty: 1.00 **Required Qty:** 1.00

D3190-1 Chafing Shield	Manufactured	No	230	Each	26.0000	2.0000	

Warehouse Location	Loc Qty	Loc Code
Main Warehouse		
ST	26	
40109	6	
47456	20	

ml 10.03.31

D407-667-205TRN Crosstube Turning Detail	Manufactured	No	230	Each	2.0000	1.0000	

Warehouse Location	Loc Qty	Loc Code
Main Warehouse		
LG	2	
55833	1	
55834	1	

10-3-18

MS20601-AD4W8 RIVET	Purchased	No	230	Each	330.0000	14.0000	

Warehouse Location	Loc Qty	Loc Code
Main Warehouse		
ST	330	
108521	200	
112203	130	

ml 10.03.31

Dart Aerospace Ltd

W/O:		WORK ORDER CHANGES					
DATE	STEP	PROCEDURE CHANGE	By	Date	Qty	Approval Chief Eng / Prod Mgr	Approval QC Inspector

Part No: _____ **PAR #:** _____ **Fault Category:** _____ **NCR:** Yes No **DQA:** _____ **Date:** _____

Resolution: _____ **Disposition:** _____ **QA: N/C Closed:** _____ **Date:** _____

NCR:		WORK ORDER NON-CONFORMANCE (NCR)						
DATE	STEP	Description of NC Section A	Corrective Action Section B			Verification Section C	Approval Chief Eng	Approval QC Inspector
			Initial Chief Eng	Action Description Chief Eng	Sign & Date			

NOTE: Date & initial all entries

H:\FORMS\Quality Assurance\approved QA\NCRWO RevE

Picklist Print

Thursday, February 25, 2010 11:39:01 AM

Work Order ID: 56504

Parent Item: D407-667-205

Parent Item Name: Crosstube Aft

Comments: IPP Rev:C□05.09.02□Add holes for compatibility with Bell Skidtubes□KJ/JLM
IPP Rev:D Added Magnobond,Rubber Cushion & Clamps 07-02-19
JLM

Start Date: 2/26/2010 **Required Date:** 3/12/2010
Start Qty: 1.00 **Required Qty:** 1.00

MS21920-22 Clamp(per MIL-DTL-8783C)	Purchased	No	230	Each	54.0000	4.0000	

Warehouse Location	Loc Qty	Loc Code
Main Warehouse		
ST	54	
109495	6	
110260	2	
111210	46	

10-03-31

6 AN5-10A Bolt	Purchased	No	260	Each	82.0000	10.0000	① M114056 10-4-15

Warehouse Location	Loc Qty	Loc Code
Main Warehouse		
ST	82	
107013	8	
110363	2	
112314	1	
113149	1	
113524	70	9

Dart Aerospace Ltd

W/O:		WORK ORDER CHANGES					
DATE	STEP	PROCEDURE CHANGE	By	Date	Qty	Approval Chief Eng / Prod Mgr	Approval QC Inspector

Part No: _____ PAR #: _____ Fault Category: _____ NCR: Yes No DQA: _____ Date: _____

Resolution: _____ Disposition: _____ QA: N/C Closed: _____ Date: _____

NCR:		WORK ORDER NON-CONFORMANCE (NCR)						
DATE	STEP	Description of NC Section A	Corrective Action Section B			Verification Section C	Approval Chief Eng	Approval QC Inspector
			Initial Chief Eng	Action Description Chief Eng	Sign & Date			

NOTE: Date & initial all entries

H:\FORMS\Quality Assurance\approved QA\NCRWO RevE

Picklist Print

Thursday, February 25, 2010 11:39:01 AM

Work Order ID: 56504

Parent Item: D407-667-205

Parent Item Name: Crosstube Aft

Comments: IPP Rev:C□05.09.02□Add holes for compatibility with Bell Skidtubes□KJ/JLM
IPP Rev:D Added Magnobond,Rubber Cushion & Clamps 07-02-19
JLM

Start Date: 2/26/2010 **Required Date:** 3/12/2010
Start Qty: 1.00 **Required Qty:** 1.00

AN5-32A Bolt	Purchased	No	260	Each	152.0000	4.0000	10-4-1 SP

Warehouse Location	Loc Qty	Loc Code
Main Warehouse		
ST	152	
106242	3	
106519	4	
110363	17	
112933	28	4
113121	100	

AN5-34A Bolt	Purchased	No	260	Each	138.0000	4.0000	10-4-1 SP

Warehouse Location	Loc Qty	Loc Code
Main Warehouse		
ST	138	
104679	2	
107013	2	
113149	84	4
113226	50	

Dart Aerospace Ltd

W/O:		WORK ORDER CHANGES					
DATE	STEP	PROCEDURE CHANGE	By	Date	Qty	Approval Chief Eng / Prod Mgr	Approval QC Inspector

Part No: _____ **PAR #:** _____ **Fault Category:** _____ **NCR:** Yes No **DQA:** _____ **Date:** _____

Resolution: _____ **Disposition:** _____ **QA: N/C Closed:** _____ **Date:** _____

NCR:		WORK ORDER NON-CONFORMANCE (NCR)						
DATE	STEP	Description of NC Section A	Corrective Action Section B			Verification Section C	Approval Chief Eng	Approval QC Inspector
			Initial Chief Eng	Action Description Chief Eng	Sign & Date			

NOTE: Date & initial all entries

H:\FORMS\Quality Assurance\approved QA\NCRWO RevE

Picklist Print

Thursday, February 25, 2010 11:39:01 AM

Work Order ID: 56504

Parent Item: D407-667-205

Parent Item Name: Crosstube Aft

Comments: IPP Rev:C□05.09.02□Add holes for compatibility with Bell Skidtubes□KJ/JLM
IPP Rev:D Added Magnobond,Rubber Cushion & Clamps 07-02-19
JLM

Start Date: 2/26/2010 **Required Date:** 3/12/2010

Start Qty: 1.00 **Required Qty:** 1.00

MS21042L5 Nut	Purchased	No	260	Each	415.0000	4.0000	10-4- 1' Sl

Warehouse Location	Loc Qty	Loc Code
Main Warehouse		
ST	414	
110382	10	
111636	1	
112314	16	
113523	187	
113537	200	4
Main Warehouse		
ST139	1	
112314	1	

Dart Aerospace Ltd

W/O:		WORK ORDER CHANGES					
DATE	STEP	PROCEDURE CHANGE	By	Date	Qty	Approval Chief Eng / Prod Mgr	Approval QC Inspector

Part No: _____ PAR #: _____ Fault Category: _____ NCR: Yes No DQA: _____ Date: _____

Resolution: _____ Disposition: _____ QA: N/C Closed: _____ Date: _____

NCR:		WORK ORDER NON-CONFORMANCE (NCR)						
DATE	STEP	Description of NC Section A	Corrective Action Section B			Verification Section C	Approval Chief Eng	Approval QC Inspector
			Initial Chief Eng	Action Description Chief Eng	Sign & Date			

NOTE: Date & initial all entries

H:\FORMS\Quality Assurance\approved QA\NCRWO RevE

Picklist Print

Thursday, February 25, 2010 11:39:01 AM

Work Order ID: 56504

Parent Item: D407-667-205

Parent Item Name: Crosstube Aft

Comments: IPP Rev:C□05.09.02□Add holes for compatibility with Bell Skidtubes□KJ/JLM
IPP Rev:D Added Magnobond,Rubber Cushion & Clamps 07-02-19
JLM

Start Date: 2/26/2010 **Required Date:** 3/12/2010
Start Qty: 1.00 **Required Qty:** 1.00

MS21920-25	Purchased	No	260	Each	176.0000	2.0000

Clamp(per MIL-DTL-8783C)

Warehouse Location	Loc Qty	Loc Code
Main Warehouse		
CA	25	
113744	25	
Main Warehouse		
ST	151	
107456	2	
108111	3	
108975	17	
109181	42	
109644	10	
111429	1	
112495	1	
113281	25	
113282	50	

M 10·03·30

Rubber Cushion's
D3595-063-450 B# 52447 x2 M 10·03·30

Dart Aerospace Ltd

W/O:		WORK ORDER CHANGES					
DATE	STEP	PROCEDURE CHANGE	By	Date	Qty	Approval Chief Eng / Prod Mgr	Approval QC Inspector

Part No: _____ **PAR #:** _____ **Fault Category:** _____ **NCR:** Yes No **DQA:** _____ **Date:** _____

Resolution: _____ **Disposition:** _____ **QA: N/C Closed:** _____ **Date:** _____

NCR:		WORK ORDER NON-CONFORMANCE (NCR)						
DATE	STEP	Description of NC Section A	Corrective Action Section B			Verification Section C	Approval Chief Eng	Approval QC Inspector
			Initial Chief Eng	Action Description Chief Eng	Sign & Date			

NOTE: Date & initial all entries

DART AEROSPACE LTD	Work Order:	56504
Description: Crosstube High Aft (407)	Part Number:	D407-667-205
Inspection Dwg: D407-667-245 **Rev:** F		Page 1 of 1

Required Dimension	Min	Max
Height	23.46	23.58
1/2 Span	45.86	45.98
Angle	54	56
Total Span	91.72	91.96

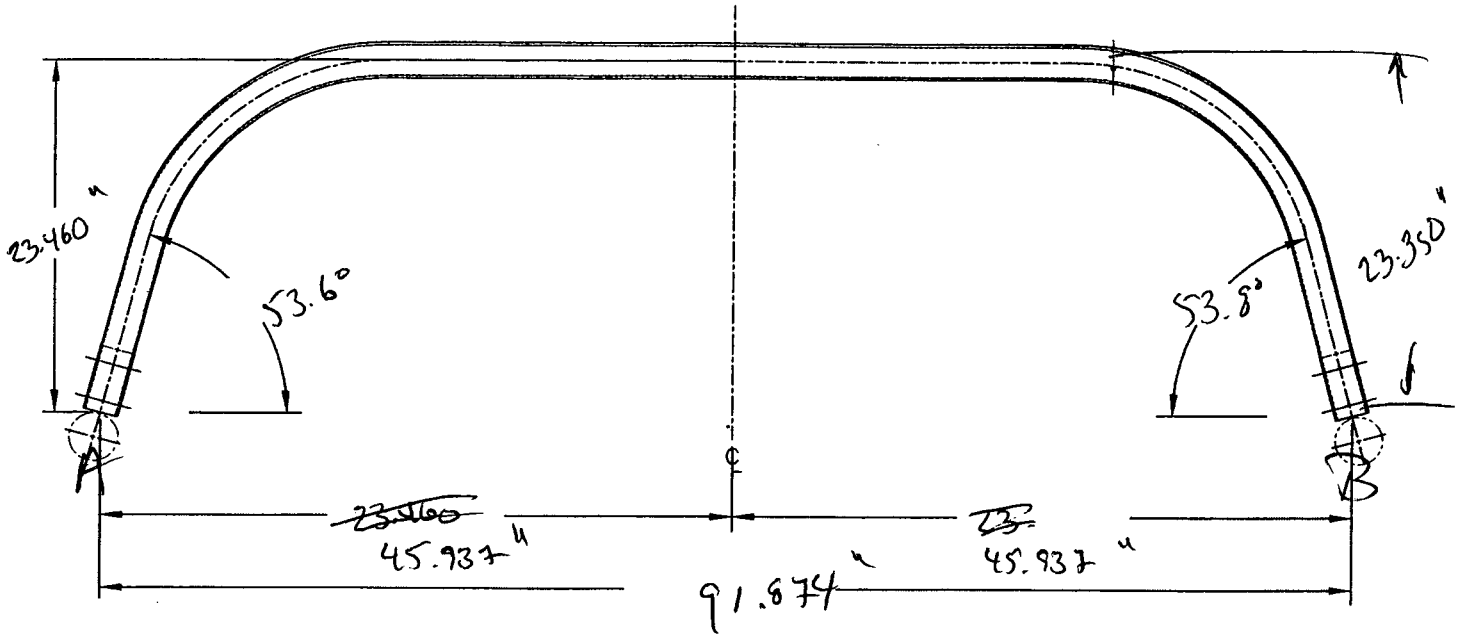

Comments
ANGLES ARE LOW, ONE HEIGHT IS LOW. Acceptable
CP 10.03.18

QC15 Inspection	S
Date	10/03/18

Rev	Date	Change	Revised by	Approved
A	07.02.06	New Issue	KJ/JM	
B	09.06.22	Dwg Rev updated	KJ	

Item	QTY -245	PART NUMBER	DESCRIPTION
1	X	D407-667-245	**CROSSTUBE ASSEMBLY (407 HIGH AFT)**
2	1	D6011-115	CROSSTUBE
3	2	D2856-400-773	ABRASION STRIP
4	2	D2873-043	NUT PLATE
5	2	D2873-045	NUT PLATE
6	1	D2894-1	SUPPORT
7	2	D3190-1	CHAFING SHIELD
8	2	D3595-063-430	RUBBER CUSHION
9	14	MS20601AD4W8	RIVET (OR NAS9302B-4-8)
10	4	MS21920-22	CLAMP
11	2	MS21920-25	CLAMP (OR MS21920-24)
12	A/R	MAGNOBOND 6398	ROCKWELL SPECIFICATION RBO-120-023 ADHESIVE (TEXTRON/BELL SPEC. 299-947-100, TYPE II, CLASS 2 ADHESIVE)

56504

GENERAL NOTES:

1) MATERIAL: MANUFACTURED FROM D6011-115
   FINISHED LENGTH = 112.91±0.020
2) FINISH: CHEMICAL CONVERSION COAT PER DART QSI 005 4.1
   PRIME INSIDE AND OUTSIDE PER DART QSI 005 4.2
   PAINT OUTSIDE PER DART QSI 005 4.2
3) TOLERANCES ARE PER DART QSI 018 UNLESS OTHERWISE NOTED.
4) UNITS: INCHES UNLESS OTHERWISE NOTED.
5) BREAK SHARP EDGES: 0.005 TO 0.010 MAX.
6) IDENTIFICATION: SCRIBE DART PART NUMBER "D407-667-245" AND BATCH NUMBER ON INSIDE OF CUFF USING VIBRATING STYLUS.
7) WEIGHT: 27.7 lbs
8) PART IS SYMMETRIC ABOUT CENTERLINE.
9) RUN-OFF PART. BLEND OUT EDGE LONGITUDINALLY, TRANSITION SHOULD BE SMOOTH.
10) BEND PROGRESSIVELY WITH A MINIMUM OF 6 PASSES. MAXIMUM TUBE FLATTENING DUE TO BENDING IS 6% BASED ON O.D.
11) LIQUID PENETRANT INSPECT OUTSIDE SURFACE OF CROSSTUBE PER QSI 038.
12) INSTALL D2894-1 CENTER SUPPORT USING A 0.03" TO 0.06" THICK LAYER OF MAGNOBOND 6398 PER QSI 015. LET CURE FOR 12 HOURS AFTER INSTALLATION AND PRIOR TO PACKAGING.
13) INSTALL MS21920-25 CLAMPS WITH D3595-063-430 RUBBER CUSHIONS TO SECURE D2894-1 SUPPORT ON TOP SIDE OF THE CROSSTUBE. ENSURE CLAMPS ARE OPPOSITE CROSSTUBE SUPPORT.
    NOTE: MS21920-24 CLAMPS CAN BE USED TO ACCOMMODATE VARYING DIAMETERS. ENSURE THERE IS A MINIMUM OF 1.5 THREADS IN SAFETY ON THE NUTS.
14) EXTREME CARE MUST BE TAKEN TO PROTECT THE OUTSIDE SURFACE OF THE TUBE. THE OUTSIDE SURFACE MUST BE SMOOTH AND FREE FROM SURFACE DEFECTS SUCH AS SCRATCHES, NICKS, OR DENTS. DEFECTS UP TO 0.005" MAY BE BLENDED OUT LONGITUDINALLY. CIRCUMFERENTIAL GRIND MARKS ARE UNACCEPTABLE.
15) INSTALL D2856-400-773 ABRASION STRIP WITH A 0.13 (REF) GAP ON BOTTOM SIDE OF CROSSTUBE, PER QSI.035.
16) INSTALL D3190-1 CHAFING SHIELDS SO THAT OVERLAP IS ON BOTTOM SIDE OF CROSSTUBE OPPOSITE D2894-1 SUPPORT.
17) TORQUE CLAMPS 80 TO 100 IN-LB. ENSURE AT LEAST 1.5 THREADS ARE SHOWING IN SAFETY AND THAT NUT HAS NOT BOTTOMED-OUT AFTER TORQUING.

RELEASED 08/11/12

REV.	DESCRIPTION	BY	DATE
F	REFORMAT NOTES TO NEW STANDARDS (ZN B8-1); RELOCATED FLAG # 6 (ZN A8-3) PER NCR 210; REMOVED REF. & ADD TOLERANCES (ZN C6-3, C4-3 & D2-3)	RF	08.11.06
E	8.02 AND 8.53 WERE 8.40 AND 8.90 (ZN D5-2); REORGANIZED VIEWS AND REFORMATED DRAWING TO CURRENT STANDARDS. REASONS: CLAMPS MOVED 0.375 TOWARD CL TO ELIMINATE INTERFERENCE WITH AIRCRAFT MOUNTS. REFERENCE: PAR#08-21 AND ECN#1225	MB	08.07.24
D	ADD VIEW FOR OEM SKID HOLES, ROTATE ORIENTATION OF CLAMPS SECTION F-F, REMOVE -851 ABRASION STRIP, ADD MAGNOBOND 6398, ADD CUSHION	PH	07.02.07
C	ADD HOLES AND NUT PLATES FOR COMPATIBILITY WITH BHT/AA SKIDTUBES	PH	05.07.26
B	ADD CHAFING SHIELD	CP	03.05.21
A	NEW ISSUE	CP	02.05.13

DESIGN		**DART AEROSPACE LTD** HAWKESBURY, ONTARIO, CANADA
DRAWN	RF	
CHECKED		DRAWING NO. D407-667-245 — REV. F — SHEET 1 OF 4
MFG. APPR.		
APPROVED		TITLE: CROSSTUBE ASS'Y (407 HIGH AFT) — SCALE: NTS
DE APPR.		
DATE	08.11.06	

COPYRIGHT © 2002 BY DART AEROSPACE LTD
THIS DOCUMENT IS PRIVATE AND CONFIDENTIAL AND IS SUPPLIED ON THE EXPRESS CONDITION THAT IT IS NOT TO BE USED FOR ANY PURPOSE OR COPIED OR COMMUNICATED TO ANY OTHER PERSON WITHOUT WRITTEN PERMISSION FROM DART AEROSPACE LTD.

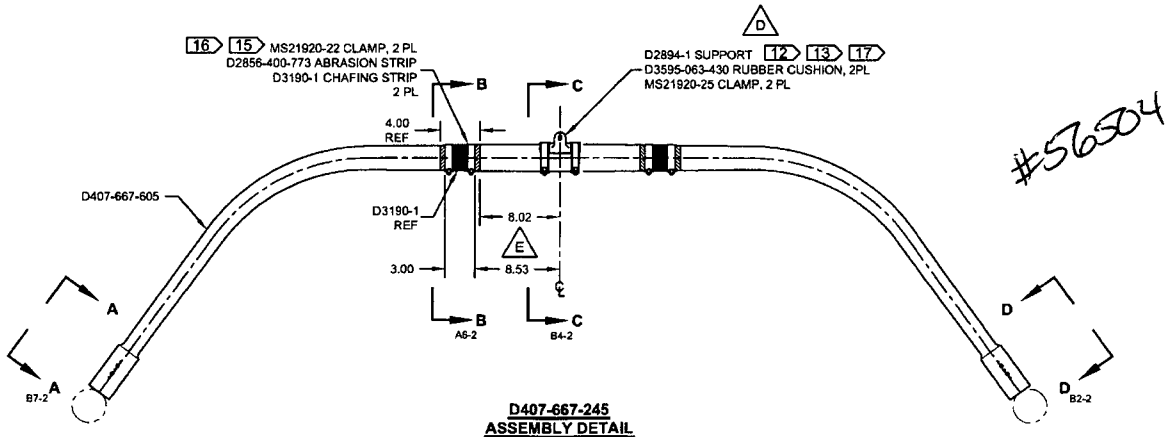

#56304

D407-667-245
ASSEMBLY DETAIL
(VIEW LOOKING FWD)

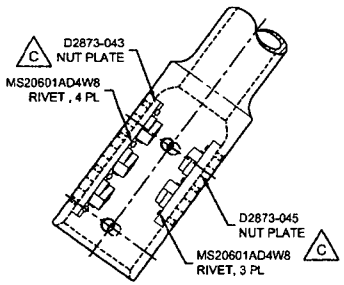

C7-2 **VIEW A-A CUFF DETAIL**
SCALE 4X

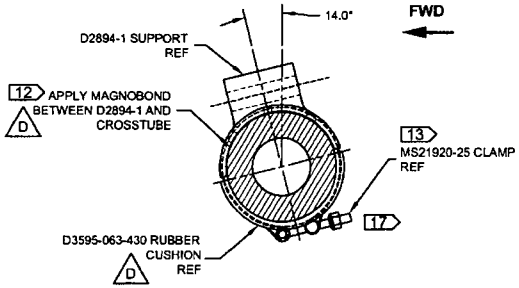

C4-2 **SECTION C-C**
SCALE 4X

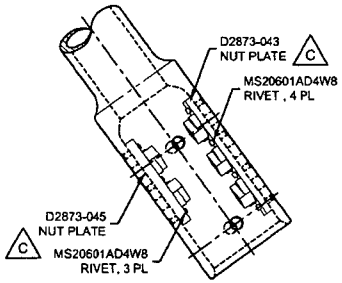

C2-2 **VIEW D-D CUFF DETAIL**
SCALE 4X

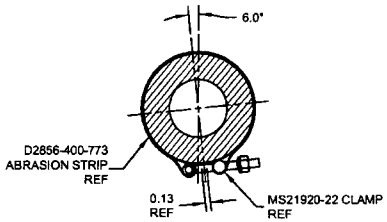

C5-2 **SECTION B-B**
SCALE 4X, 2PL

RELEASED
08/11/12

DESIGN		**DART AEROSPACE LTD** HAWKESBURY, ONTARIO, CANADA
DRAWN	RF	
CHECKED		DRAWING NO. D407-667-245 — REV. F — SHEET 2 OF 4
MFG. APPR.		
APPROVED		TITLE: CROSSTUBE ASS'Y (407 HIGH AFT) — SCALE: NTS
DE APPR.		
DATE	08.11.06	

COPYRIGHT © 2002 BY DART AEROSPACE LTD
THIS DOCUMENT IS PRIVATE AND CONFIDENTIAL AND IS SUPPLIED ON THE EXPRESS CONDITION THAT IT IS NOT TO BE USED FOR ANY PURPOSE OR COPIED OR COMMUNICATED TO ANY OTHER PERSON WITHOUT WRITTEN PERMISSION FROM DART AEROSPACE LTD.

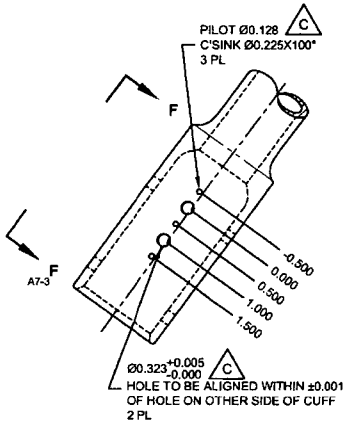

C8-3 **DETAIL E**
SCALE 4X
(VIEW LOOKING FWD)

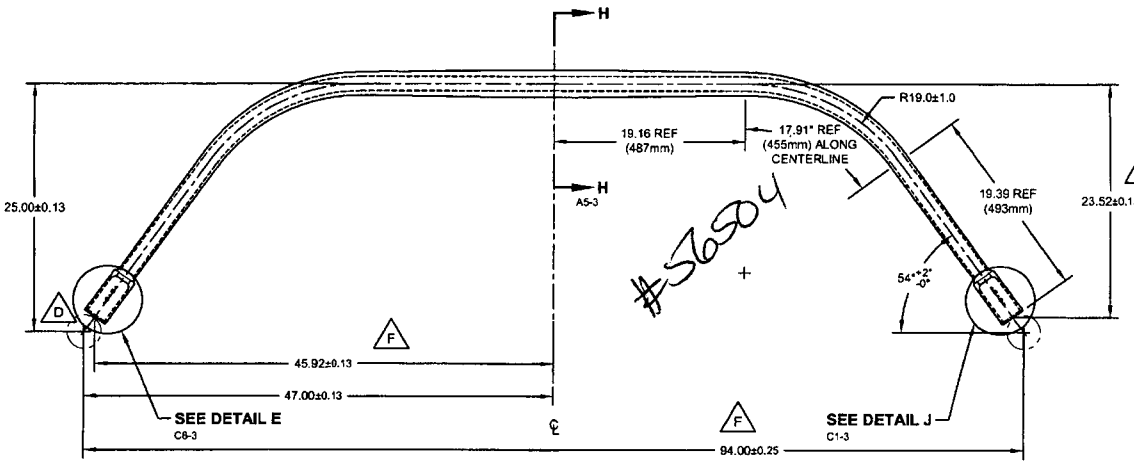

D407-667-605
10 **BENDING AND DRILLING DETAIL**
(VIEW LOOKING FWD)

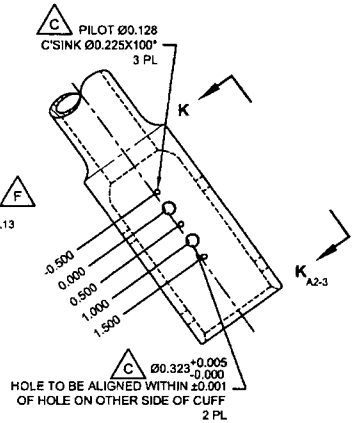

C3-3 **DETAIL J**
SCALE 4X
(VIEW LOOKING FWD)

RELEASED
08/11/06

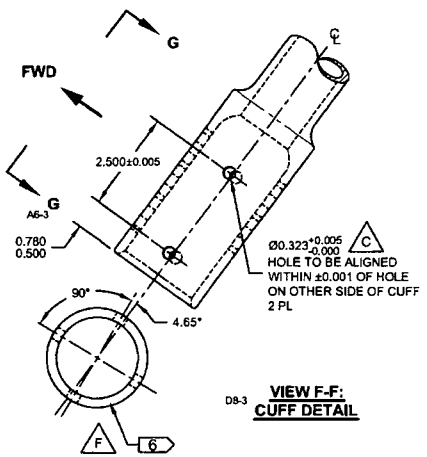

D8-3 **VIEW F-F: CUFF DETAIL**

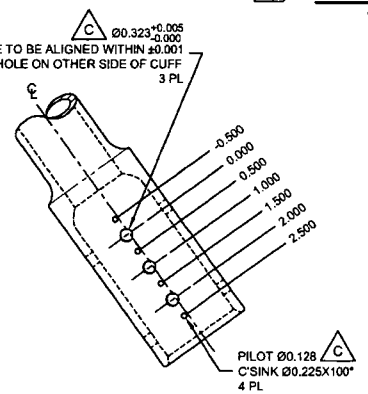

B8-3 **VIEW G-G**
(VIEW LOOKING AFT, ROTATED)

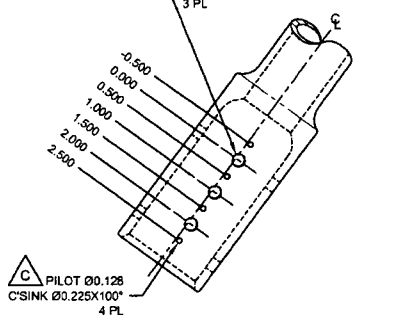

B1-3 **VIEW L-L**
(VIEW LOOKING AFT, ROTATED)

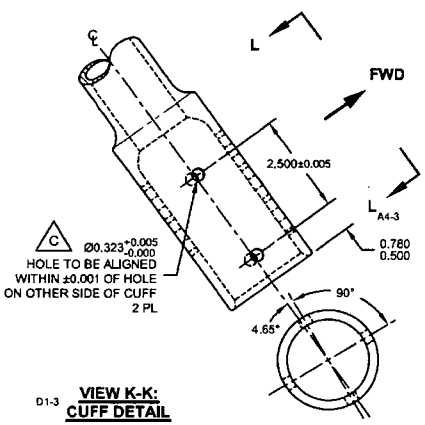

D1-3 **VIEW K-K: CUFF DETAIL**

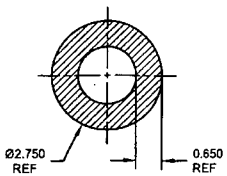

D4-3 **SECTION H-H**
SCALE 4X

DESIGN		**DART AEROSPACE LTD** HAWKESBURY, ONTARIO, CANADA
DRAWN	RF	
CHECKED		DRAWING NO. D407-667-245 — REV. F — SHEET 3 OF 4
MFG. APPR.		
APPROVED		TITLE: CROSSTUBE ASS'Y (407 HIGH AFT) — SCALE: NTS
DE APPR.		
DATE	08.11.06	

COPYRIGHT © 2002 BY DART AEROSPACE LTD
THIS DOCUMENT IS PRIVATE AND CONFIDENTIAL AND IS SUPPLIED ON THE EXPRESS CONDITION THAT IT IS NOT TO BE USED FOR ANY PURPOSE OR COPIED OR COMMUNICATED TO ANY OTHER PERSON WITHOUT WRITTEN PERMISSION FROM DART AEROSPACE LTD.

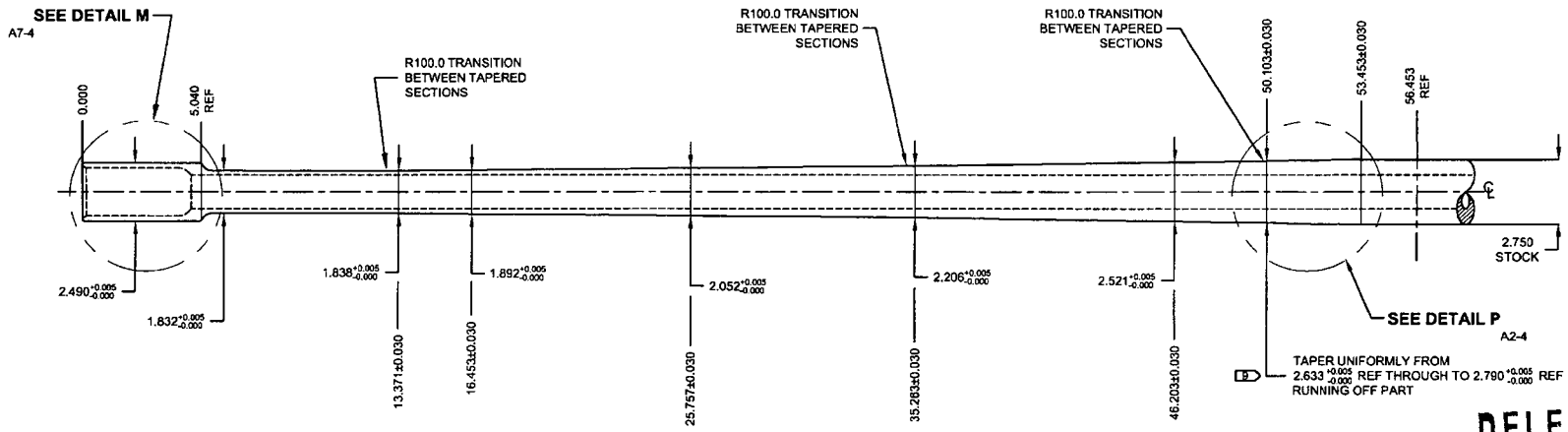

D407-667-245 MACHINING DETAIL

RELEASED 08/11/12

#56504

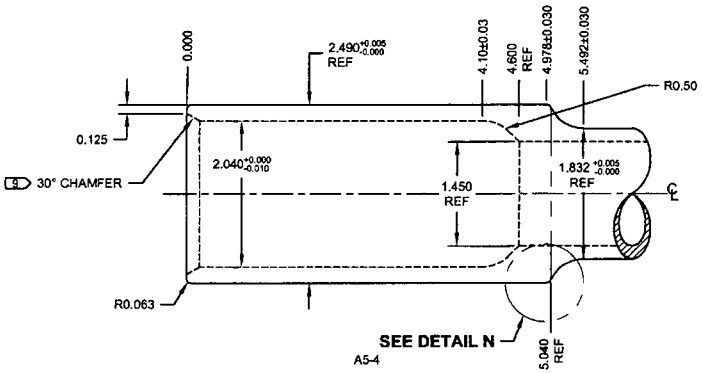

D8-4 **DETAIL M: CROSSTUBE CUFF**
SCALE 3X

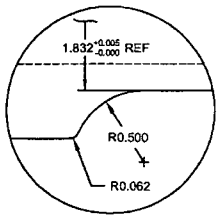

B6-4 **DETAIL N: CUFF TRANSITION**
SCALE 2X

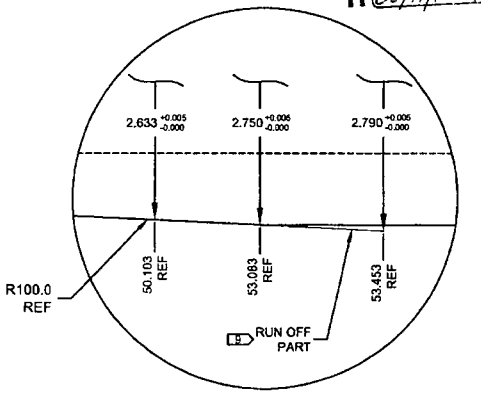

C1-4 **DETAIL P: TAPER RUN-OFF**
NOT TO SCALE

DESIGN		**DART AEROSPACE LTD** HAWKESBURY, ONTARIO, CANADA
DRAWN	RF	
CHECKED		DRAWING NO. REV. F
MFG. APPR.		D407-667-245 SHEET 4 OF 4
APPROVED		TITLE SCALE
DE APPR.		CROSSTUBE ASS'Y (407 HIGH AFT) NTS
DATE	08.11.06	

COPYRIGHT © 2002 BY DART AEROSPACE LTD
THIS DOCUMENT IS PRIVATE AND CONFIDENTIAL AND IS SUPPLIED ON THE EXPRESS CONDITION THAT IT IS NOT TO BE USED FOR ANY PURPOSE OR COPIED OR COMMUNICATED TO ANY OTHER PERSON WITHOUT WRITTEN PERMISSION FROM DART AEROSPACE LTD.

ACUREN

LIQUID PENETRANT TEST REPORT

P- 1532

PAGE 1 OF

CLIENT: DART AEROSPACE
ATTENTION: LINDA / CHANTEL
ADDRESS: 1270 ABERDEEN ST. HAWKESBURY ON, K6H 1K7

DATE: March 26-2010
TIME: AM ☑ P
ACUREN JOB NO.: 188-10-0715
PO/WO NO.: 11550
WORK LOCATION: SHOP
ACCEPTANCE STD.: ASTM 1417 REV./DATE: 2cc

PROJECT: F.P.I. ON CROSS TUBES
ITEM(S) EXAMINED: 6 PCS

JOB DESCRIPTION

PROCEDURE NO. LT-0007 REV./DATE
TECHNIQUE NO. LT-TGH2 REV./DATE
PART NO.: —
MATERIAL: ALUMINUM ALUMINUM THICKNESS: —
SCOPE: WET FLOURESCENT LIQUID PENETRANT INSPECTION CARRIED OUT 100% EXTERNAL

TEST DETAILS

METHOD: ☑ FLUORESCENT ☐ VISIBLE
FAMILY BRAND: MAGNAFLUX
PENETRANT: 2L67 MINIMUM DWELL TIME: 45/10 MIN.
PENETRANT REMOVER: H2O MINIMUM DRY TIME: >10 MIN.
DEVELOPER: SKD 52 MINIMUM DWELL TIME: 10 MIN.
DEVELOPER TYPE: ☑ NON AQUEOUS ☐ AQUEOUS ☐ DRY

☑ WATER WASH ☐ SOLVENT REMOVABLE ☐ POST EMUL
BLACK LIGHT S/N: 16459 ☐ OUTPUT > 1000 μ W/CM² ☐ AMBIENT <
LIGHTING EQUIP. ☐ FLASHLIGHT ☐ TROUBLELIGHT ☐ OUTPUT>100 fc @ SU
OTHER: LABINO
LIGHT METER S/N: 1098866 CAL DUE DATE: MAY-7-2

TEST SURFACE

SURFACE CONDITION: ☐ AS GROUND ☐ AS WELDED ☑ MACHINED ☐ SHOT BLASTED ☐ CLEAN BARE META
SURFACE TEMPERATURE: ☐ < - 4°C/ 20°F ☐ - 4°C/ 20°F TO 10°C/50°F ☑ 10°C/50°F TO 52°C/125°F ☐ > 52°C/125°F

RESULTS- (☐ METRIC ☐ IMPERIAL)

1	CROSSTUBE, W.O. 56473	✓
1	CROSSTUBE, W.O. 56475	✓
1	CROSSTUBE, W.O. 56504	✓
1	CROSSTUBE, W.O. 56505	✓
1	CROSSTUBE, W.O. 56799	✓
1	CROSSTUBE, W.O. 56800	✓

10 03 29

Scope of Services
The agreement of Acuren Group Inc. to perform services extends only to those services provided for in writing. Under no circumstances shall such services extend beyond the performance of the requested services. It is expressly un that all descriptions, comments and expressions of opinion reflect the opinions or observations of Acuren Group Inc. based on information and assumptions supplied by the owner/operator and are not intended nor can they be constr representations or warranties. Acuren Group Inc. is not assuming any responsibilities of the owner/operator and the owner/operator retains complete responsibility for the engineering, manufacture, repair and use decisions as a res data or other information provided by Acuren Group Inc. In no event shall Acuren Group Inc.'s liability in respect of the services referred to herein exceed the amount paid for such services.
Standard of Care
In performing the services provided, Acuren Group Inc. uses the degree, care and skill ordinarily exercised under similar circumstances by others performing such services in the same or similar locality. No other warranty, expresse implied, is made or intended by Acuren Group Inc.

SIGNATURES

CLIENT REPRESENTATIVE: Matthew Muraoch (PRINT) — Matthew Muraoch (SIGNATURE)
TECHNICIAN (SIGNATURE):
NAME (PRINT): MIKE JOHNSTON
1st TECHNICIAN — 2nd TECHNICIAN
CGSB LEVEL: 2 SNT LEVEL: — CGSB LEVEL: — SNT LEVEL: —
CGSB REG. NO: 6606 CGSB REG. NO:

DTR # E-27370
REPORT REVIEWED BY:
NAME INITIALS

WHITE – CLIENT COPY CANARY – OFFICE COPY PINK – TECHNICIAN COPY GOLD – OFFICE COPY

PT Sept 2

D407-667-205 Bom.

Status	Item ID	Rev	Name	Start Date	Quantity Pe	UOM	Scrap %	Route Seq ID	Sort	Comments	Date Last Mod	Add Date
✓	D407-667-205TRN		Crosstube Turning Detail	05/12/2009	1.0000	Each	0 %	110	0		07/04/2010 1:26 PM	05/12/2...
✓	AN960JD516		Washer	01/01/2008	18.0000	Each	0 %	230	0		07/04/2010 1:26 PM	05/12/2...
✓	MS21920-25		Clamp(per MIL-DTL-8783C)	01/01/2008	2.0000	Each	0 %	230	0		07/04/2010 1:26 PM	05/12/2...
✓	D3190-1		Chafing Shield	05/12/2009	2.0000	Each	0 %	230	0		05/12/2009 8:26 PM	05/12/2...
✓	D2856-400		Abraison Strip	05/12/2009	1.2880	f	5 %	230	0		05/12/2009 8:23 PM	05/12/2...
✓	D2873-045		Nut Plate Assembly	05/12/2009	2.0000	Each	0 %	230	0		05/12/2009 8:23 PM	05/12/2...
✓	D3595-063-450		RUBBER CUSHION	07/04/2010	2.0000	Each	0 %	230	0		07/04/2010 1:37 PM	07/04/2...
✓	MS21920-22		Clamp(per MIL-DTL-8783C)	01/01/2008	4.0000	Each	0 %	230	0		05/12/2009 7:15 PM	05/12/2...
✓	D2873-043		Nut Plate Assembly	05/12/2009	2.0000	Each	0 %	230	0		05/12/2009 8:23 PM	05/12/2...
✓	MS20601-AD4W8		RIVET	01/01/2008	14.0000	Each	0 %	230	0		05/12/2009 7:15 PM	05/12/2...
✓	D2894-1		2.750 Support	05/12/2009	1.0000	Each	0 %	230	0		05/12/2009 8:23 PM	05/12/2...
✓	AN5-32A		Bolt	01/01/2008	4.0000	Each	0 %	260	0		05/12/2009 7:15 PM	05/12/2...
✓	AN5-34A		Bolt	01/01/2008	4.0000	Each	0 %	260	0		05/12/2009 7:15 PM	05/12/2...
✓	AN5-10A		Bolt	01/01/2008	10.0000	Each	0 %	260	0		05/12/2009 7:15 PM	05/12/2...
✓	MS21042L5		Nut	01/01/2008	4.0000	Each	0 %	260	0		05/12/2009 7:15 PM	05/12/2...

EAGLE
COPTERS MAINTENANCE LTD.

Value stream mapping

- Value stream mapping is **the best way to identify where the high payoff** opportunities are, yet value stream mapping is the lean tool most likely to **not be used by** companies doing pretend lean!